Special Study Report

2008 PSCo Solar RFP

Solar Bids in San Luis Valley

Bid S013 - 23 MW (Poncha – Sargent 115 kV)
Bid S014 - 23 MW (Moffat – Mosca 69 kV)
Bid S016 - 16 MW (Mosca 69 kV Substation)

PSCo Transmission Planning

September 25, 2008

Executive Summary

Public Service Company of Colorado (PSCo) Transmission received a special study request on July 15, 2008 to determine the feasibility of interconnecting three (3) different solar bids, independently of one another, in the San Luis Valley of Colorado. The Customer's proposed commercial operation date is 2011-2012 timeframe. The request was studied as both an Energy Resource and a Network Resource and it was conducted primarily as a "stand-alone" project with no consideration of higher queue projects. PSCo has determined that it is feasible to interconnect each individual bid by the requested in service date with no network reinforcements on a non-simultaneous basis. There will be interconnection costs associated with each bid.

Energy Resource

The ER portion of this study determined that the Customer could inject at full output (23 MW, 23 MW, and 16 MW) at their requested points of delivery without any network reinforcements.

The time required to engineer, permit, and construct all the required PSCo facilities for interconnection is estimated to be at least 24 months. According to the interconnection request, the Customer will engineer, permit, construct, and finance any transmission line to the proposed tap station.

S013 – 23 MW

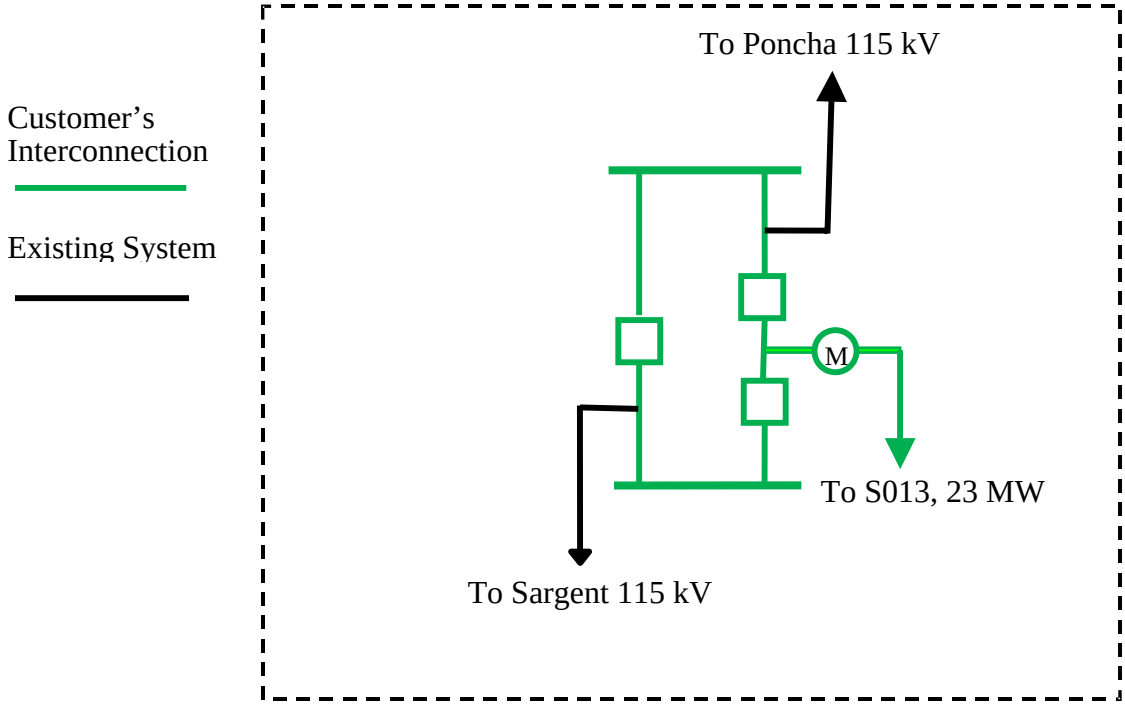

Figure 1: Customer's interconnection tapping the Poncha – Sargent 115 kV with a 3-breaker ring bus.

S014 – 23 MW

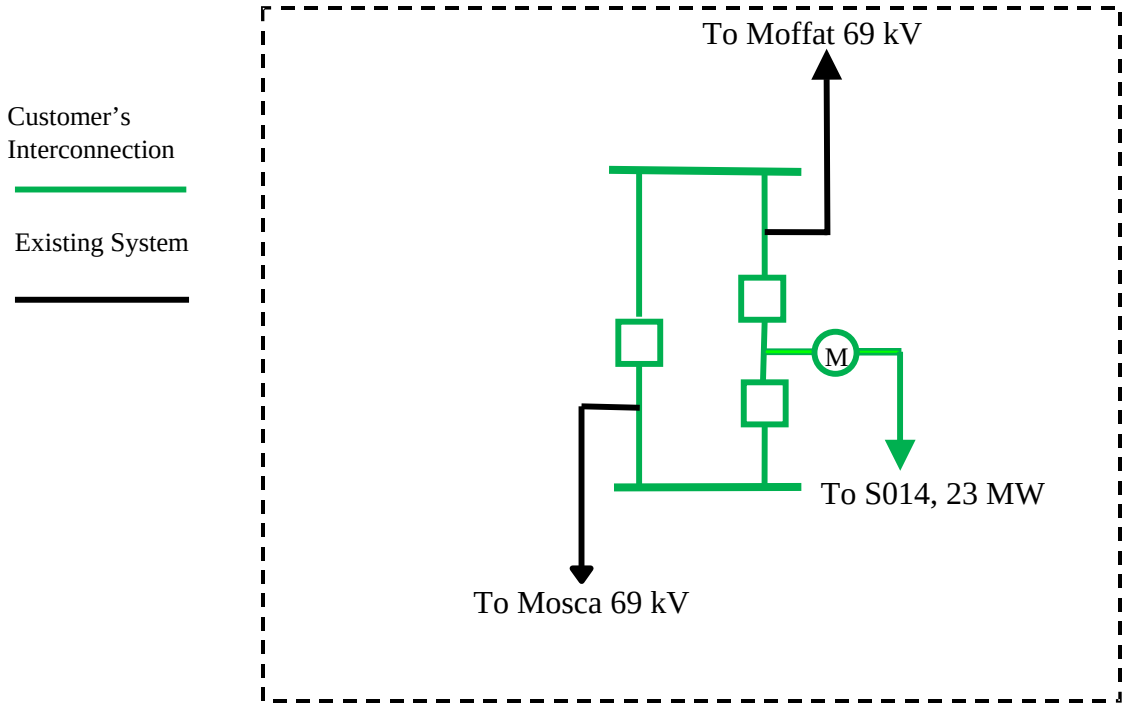

Figure 2: Customer's interconnection tapping the Mosca – Moffat 69 kV with a 3-breaker ring bus.

S016 – 16 MW

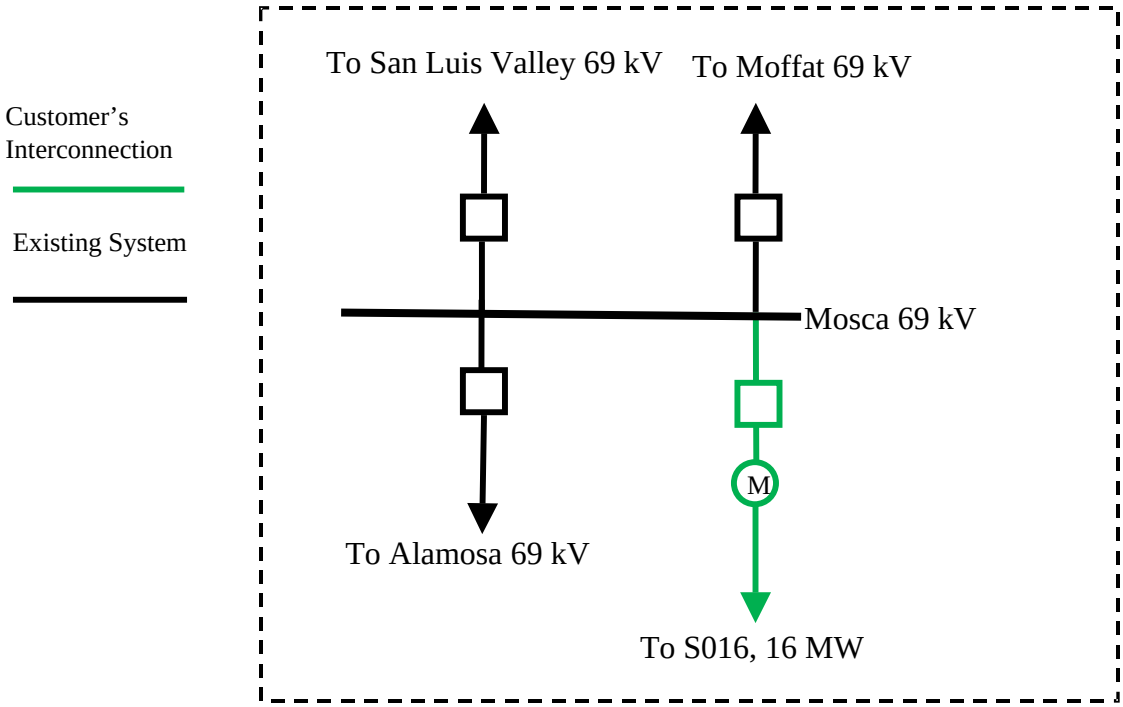

Figure 3: Customer's interconnection at the Mosca 69 kV substation.

Introduction

On July 15, 2008, Xcel Energy Resource Planning and Acquisition entered into a Special Study agreement with the PSCo transmission function to study three potential bids associated with the 2008 Solar RFP. The Special Study included evaluation of feasibility for each bid from a system planning perspective, identification and estimation of interconnection costs, and identification and estimation of network upgrade costs. The cost responsibilities associated with the facilities required to interconnect the new generation onto the PSCo transmission system shall be allocated per the appropriate FERC guidelines (LGIP or SGIP). Interconnection and network upgrade facilities are subject to change upon more detailed engineering analysis.

The three potential solar bids are S013, S014, and S016. The S013 bid would interconnect 23.0 MW of solar generation on the existing PSCo Sargent – Poncha 115kV transmission line. The requested in-service date for this bid is December 31, 2011.

The S014 bid would interconnect 23.0 MW of solar generation on the existing PSCo Moffat – Mosca 69 kV transmission line. The requested in-service date for this bid is December 31, 2011.

The S016 bid would interconnect 16.0 MW at the existing Mosca 69kV substation. The requested in-service date for this bid is December 31, 2010.

Study Scope and Analysis

For this special solar study, Xcel Energy Resource Planning is only interested in the power flow studies and the associated costs. The power flow analyses provide a preliminary identification of any thermal or voltage limit violations resulting of the interconnection. PSCo did not evaluate any additional requirements or VAR support to maintain voltage within 0.95 – 1.05 per-unit at the point of interconnection.

PSCo adheres to NERC / WECC Reliability Criteria, as well as internal Company criteria for planning studies. During system intact conditions, criteria are to maintain transmission system bus voltages between 0.95 and 1.05 per-unit of system nominal / normal conditions, and steady state power flows within 1.0 per-unit of all elements' thermal (continuous current or MVA) ratings. Operationally, PSCo tries to maintain a transmission system voltage profile ranging from 1.02 per-unit or higher at generation buses, to 1.0 per-unit or higher at transmission load buses. Following a single contingency element outage, transmission system steady state bus voltages must remain within 0.90 per-unit to 1.10 per-unit, and power flows within 1.0 per-unit of the elements continuous thermal ratings.

Power Flow Study Models

The power flow studies were based on a PSCo developed 2011 heavy summer base case that originated from the Western Electricity Coordinating Council (WECC) approved 2011 heavy summer base model. For S013, a new 3-breaker ring bus substation was created and tapped the Sargent – Poncha 115 kV at 10.5 miles SE of the city of Saguache, Colorado. The S013

consisted of 23 MW of solar, modeled as a lumped equivalent at the 34.5 kV without any VAR support. For S014, a new 3-breaker ring bus substation was created and tapped the Mosca – Moffat 69 kV at 6 miles south of the city of Moffat, Colorado. The S014 consisted of 23 MW of solar, modeled as a lump equivalent at the 34.5 kV without any VAR support. For S016, the 16 MW of solar was modeled as a lump equivalent at the 34.5 kV bus stepping up to Mosca 69 kV bus. The step up transformer for all three studies was assumed to be rated at least the size of the lumped equivalent generator All studies were scheduled to the northern PSCo system by reducing generation in that area.

Power Flow Study Results and Conclusions

The ER portion of this study determined that the Customer could provide full output of firm energy for all three solar bids, non-simultaneously, in San Luis Valley without the construction of network reinforcements. Refer to Appendix A for the contingency comparison table detailing the equipment loading for San Luis Valley. The study results show that there were no thermal and voltage violations in the area of interest, thus, leading to a conclusion that the system is capable of handling any of the three solar bids in San Luis Valley. Any changes to the bids are subjected to a re-study.

Costs Estimates and Assumptions

The estimated total costs required for interconnection are:

S013 (23 MW, 3-breaker ring bus tapping Poncha – Sargent 115 kV) = **$2,210,000**
S014 (23 MW, 3-breaker ring bus tapping Moffat – Mosca 69 kV) = **$2,151,000**
S016 (16 MW, interconnecting into Mosca 69 kV bus) = **$470,000**

Engineering also included a cost estimate for a 20 MVA generator step-up transformer (GSU) as requested by the Customer. Please note that there is a conflict between the size of the GSU and the actual output of S013 and S014. In this case, the GSU was slightly undersized according to the single line diagram provided by the Customer at the scoping meeting.

The estimated costs shown are (+/-30%) estimates in 2008 dollars and are based upon typical construction costs for previously performed similar construction. These estimated costs include all applicable labor and overheads associated with the engineering, design, and construction of these new PSCo facilities. This estimate did not include the cost for any other Customer owned equipment and associated design and engineering.

The following tables list the improvements required to accommodate the interconnection. The cost responsibilities associated with these facilities shall be handled as per current FERC guidelines. System improvements are subject to change upon more detailed analysis.

Table 1 – S013 Interconnection Costs (23 MW of Solar)

Element	Description	Cost Est. Millions
Sargent-Poncha 115 kV	Construct new 115kV 3-breaker-ring switchyard.	**$2.067**
	Re-route transmission line into new substation.	**$0.123**
	Siting and Land Rights for required easements, reports, permits and licenses.	**$0.020**
	Total Cost for Interconnection Facilities	**$2.210**
Time Frame	**(To engineer, procure, and construct interconnection facilities – does not include GSU)**	**24 Mo.**
	Indicative (no implied accuracy) estimate for GSU – 115/34.5kV Y-Delta, 12/16/20MVA, 65 deg C, Z = 9%	**$0.925**

Table 2 – S014 Interconnection Costs (23 MW of Solar)

Element	Description	Cost Est. Millions
Moffat-Mosca 69 kV	Construct new 69kV 3-breaker-ring switchyard.	**$1.610**
	Re-route transmission line into new substation.	**$0.121**
	Install relaying at remote substation ends.	**$0.400**
	Siting and Land Rights for required easements, reports, permits and licenses.	**$0.020**
	Total Cost for Interconnection Facilities	**$2.151**
Time Frame	**(To engineer, procure, and construct interconnection facilities – does not include GSU)**	**24 Mo.**
	Indicative (no implied accuracy) estimate for GSU – 69/34.5kV Y-Delta, 12/16/20MVA, 65 deg C, Z = 9%	**$0.730**

Table 3 – S016 Interconnection Costs (16 MW of Solar)

Element	Description	Cost Est. Millions
Mosca 69 kV Substation	Add new 69 kV line termination at Mosca substation.	**$0.470**
	Total Cost for Interconnection Facilities	**$0.470**
Time Frame	**(To engineer, procure, and construct interconnection facilities – does not include GSU)**	**24 Mo.**
	Indicative (no implied accuracy) estimate for GSU – 69/34.5kV Y-Delta, 12/16/20MVA, 65 deg C, Z = 9%	**$0.730**

Assumptions

- Estimates were done with scoping level accuracy (+/- 30%), with minor engineering analysis performed. Project would need to be re-estimated if it is chosen to move forward, as the ISD is several years in the future.
- All estimates were done using 2008 dollars for material and labor rates.
- There was no contingency added to the estimates.
- All labor was estimated at straight-time rate, with no overtime.
- Assumed S013 and S014 Customer would provide a graded site for the new switching station. Customer would provide PSCo a permanent land-right to use the site, and would provide the majority of the required permits and easements to PSCo.
- Assumed S016 Customer will be responsible for interconnecting transmission line into Mosca substation. Estimated (minimum) time to engineer and construct this project is 24-months to meet a 12/31/2010 ISD.
- Estimated (minimum) time to engineer and construct this project is 24-months to meet a 12/31/2011 ISD.
- There were not any network upgrades identified to accommodate this new generation, and as such were not estimated.
- For S013 and S014, a 3-breaker-ring configuration was selected based on guidance from PSCo Transmission Planning.

Appendix A
Contingency Results

Table 4: Contingency Comparison Table of Most Significant Contingencies

Monitored Element *									Case	Benchmark: 2011HS WECC Approved Base Case		Bid S013: 23 MW Tapping Poncha - Sargent 115 kV		Bid S014: 23 MW Tapping Moffat - Mosca 69 kV		Bid S016: 16 MW Interconnecting To Mosca 69 kV Bus		
From Bus #	From Name	kV	Area	To Bus #	To Name	kV	Area	ID	Rating [MVA]	N-0	N-1	N-0	N-1	N-0	N-1	N-0	N-1	List Of Contingencies
70955	OPSLR13	115	70	70379	SARGENT	115	70	1	102	x	x	0.19	0.21	x	x	x	x	70327 PONCHA 115 TO 70955 OPSLR13 115
70955	OPSLR13	115	70	70327	PONCHA	115	70	1	102	x	x	0.09	0.21	x	x	x	x	70955 OPSLR13 115 TO 70379 SARGENT 115
70953	OPSLR14	69	70	70289	MOFFAT	69	70	1	102	x	x	x	x	0.29	0.80	x	x	70327 PONCHA 115 TO 70955 OPSLR13 115
70953	OPSLR14	69	70	70292	MOSCA	69	70	1	102	x	x	x	x	0.61	0.89	x	x	70955 OPSLR13 115 TO 70379 SARGENT 115
70028	ANSEL_TS	69	70	70376	SANSVLY	69	70	1	65	0.95	0.26	0.11	0.26	0.10	0.27	0.17	0.26	70379 SARGENT 115 TO 70380 SARGENT 69
70374	SANLSVLY	115	70	70376	SANSLVLY	69	70	T1	42	0.30	0.43	0.29	0.41	0.15	0.21	0.23	0.32	70374 SANLSVLY 115 TO 70376 SANLSVLY 69
70374	SANLSVLY	115	70	70376	SANSLVLY	69	70	T2	42	0.30	0.43	0.29	0.41	0.15	0.21	0.23	0.32	70374 SANLSVLY 11T TO 70376 SANSLVLY 69
70292	MOSCA	69	70	70024	ALMSA_ST	69	70	1	26	0.04	0.26	0.04	0.26	0.20	0.78	0.14	0.48	70376 SANLSVLY 69 TO 70292 MOSCA 69
70375	SANLSVLY	230	70	70374	SANLSVLY	115	70	T1	150	0.26	0.50	0.21	0.41	0.20	0.38	0.21	0.41	70375 SANLSVLY 230 TO 70374 SANLSVLY 115
70375	SANLSVLY	230	70	70374	SANLSVLY	115	70	T2	150	0.26	0.50	0.21	0.41	0.20	0.38	0.21	0.41	70375 SANLSVLY 230 TO 70374 SANLSVLY 115

*Note: This table lists the most extreme contingencies for the area of interest. This is NOT the complete list of outages.